ANCORTEK

SDR-RF 620B Module

SDR-RF 620B module is a low power and high performance RF transmitter-receiver solution designed for operation in C-band centered at 6.2 GHz. It is intended to interface with the processor module SDR-PM 402, which functions as a micro controller, processor and power management with a 24-pin flat flex cable (FFC) to form a standalone system.

Typical output power of the transmitter channel is 19 dBm. Single-ended SMA female connectors are installed for easy connection to antennas.

The receiver has an overall 3.4dB low noise figure with two stages of low-noise amplifier and exceptionally linear response with a flat gain of 28dB.

The ability of wide-range frequency-tuning makes this RF module ideal for applications with high-resolution wide-band and avoiding 5.8 GHz Wi-Fi interference.

For those who would like to avoid 5.8 GHz interference but stay in the C-band, please select this SDR-RF 620B module (6.0-6.4 GHz).

FEATURES

- Coverage of the C-band frequency centered at 6.2 GHz
- FMCW/FSK/CW waveforms
- Wide bandwidth up to 400 MHz
- Customized bandwidth expandable to 800 MHz
- High conversion gain in the receiver channel
- Low overall noise figure
- Moderate output power
- Low phase noise
- Single +5V DC supply voltage
- Low power consumption
- SMA connectors for antennas
- 24-pin FFC cable for connecting to our processor module
- Suppression of cooling fan interference
- On-board automatic correction of VCO nonlinearity
- RF Shielding

Description of FFC Connector Pins

Pin	Name	Direction	Description
1	GND	comm	Ground
2	3.3V	in	3.3V
3	1.8V	in	1.8V
4	GND	comm	Ground
5	Vcc	in	+5V
6	GND	comm	Ground
7	I/001	in/out	Spare
8	I/002	in/out	I2C_SCL
9	I/003	in/out	Spare
10	I/004	in/out	I2C_SDA
11	I/005	in/out	Spare
12	I/006	in/out	Spare
13	I/007	in/out	Spare
14	I/008	in/out	Spare
15	I/009	in/out	Spare
16	I/010	in/out	Spare
17	I/011	in/out	Spare
18	I/012	in/out	Spare
19	Vtune	in	Vtune for VCO
20	IF_I	out	IF in phase
21	IF_Q	out	IF quadratic
22	GND	comm	Ground
23	Vcc	in	+5V
24	Vcc	in	+5V

SDR-RF 620B Module Block Diagram

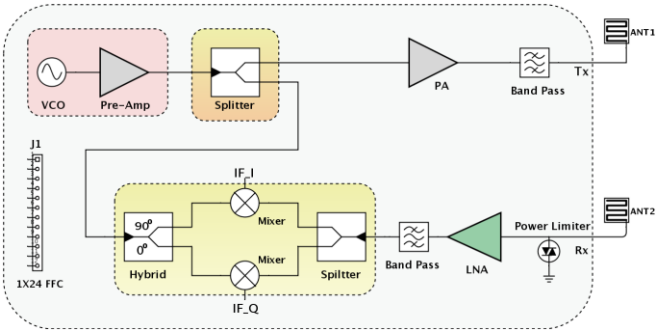

SSB Phase Noise

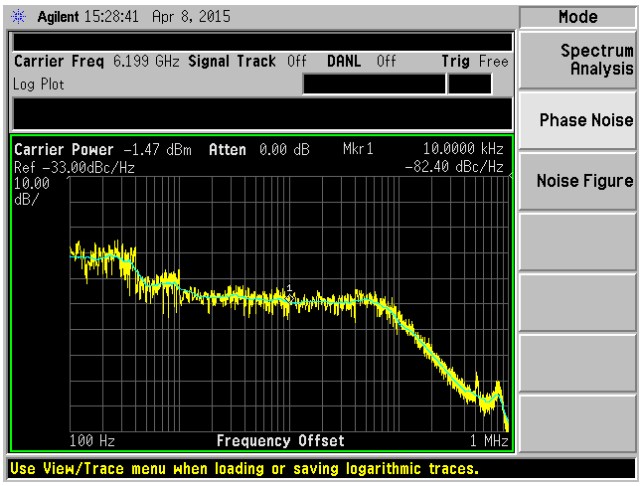

SDR-RF 620B Module Specifications

Parameter	Min.	Typ.	Max.	Units
Frequency Range	6.0		6.4	GHz
Expandable Frequency Range	5.6		6.4	GHz
Tune Voltage	0		5	V
Tuning Sensitivity @RF Port		0.13		GHz/V
Power Output	18	19	20	dBm
SSB Phase Noise @10KHz offset		-80		dBc
SSB Phase Noise @1MHz offset		-130		dBc
Conversion Gain Over Rx Channel	26	28	30	dB
Noise Figure over Rx channel	3.2	3.4	3.6	dB
Maximum input power		10		dBm
OIP3		35		dBm
IIP3		-5		dBm
IIP_{1dB}		-11		dBm
Supply voltage	4.75	5	5.25	V
Supply current	650	670	700	mA
Operating temperature	-40		85	C°
Storage temperature	-65		150	C°
Dimensions	L=79	W=56	H=13	mm

To Purchase:

Ancortek Inc.
11092 B Lee Highway
Suite 104
Fairfax, VA 22030

+1-703-531-8997
info@ancortek.com
www.ancortek.com

We offer customization!
Please contact us regarding your custom development needs.